SUSPENSION, FRONT SHOCK MOUNTING - Z26S4D92AN/AH/BN/BH (C750591)

2026 RZR - RZR PRO S4 ULTIMATE (R01) - Z26S4D92AN/AH/BN/BH

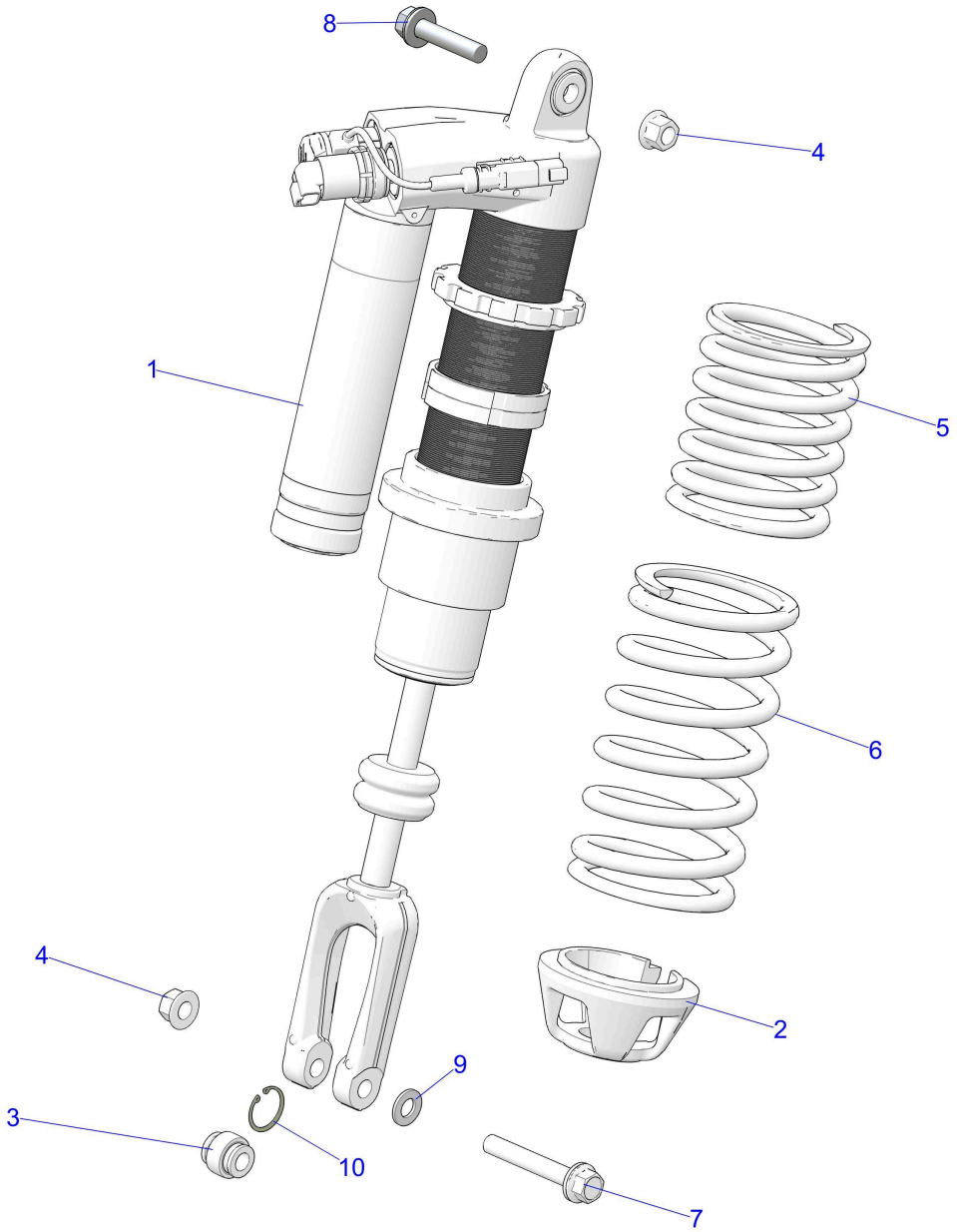

© 2024 Polaris Industries Inc.

C750591

Reference #	*Part#*	*Description*	*Quantity*
1	7046343	SHOCK-FRONT,DX,LH,MP	1
1	7046344	SHOCK-FRONT,DX,RH,MP	1
2	5639841	RETAINER-SPRING,CAST	2
2	5634675	RETAINER-SPRING,CAST	2
3	7082662	BEARING-SPHERICAL,M14,30X32	1
4	7547981	NUT-HXFL-M14X2X 10 ZFB SPC	2
5	7045638-737	SPRING-FRONT,TENDER,IS BLUE [INDIAN SKY BLUE]	1
6	7046325-737	SPR-350# 14FL 3.75-ID,S.BLUE [INDIAN SKY BLUE]	1
7	7521335-95	SCR-HXFL-M14X2.0X95 10.9 ZFB	2
8	7521335-65	SCR-HXFL-M14X2.0X65 10.9 ZFB	2

9	7557195	WSHR-15X28X2.5 ZPB	2
10	7710539	RING-RETAINING,1.25 ID HSNG	1

Copyright 1996-2026 Polaris Industries U.S.A All rights reserved.